SURVEY SHEET. CENTER OPENING 2 SPD DRYWALL ENTRANCE

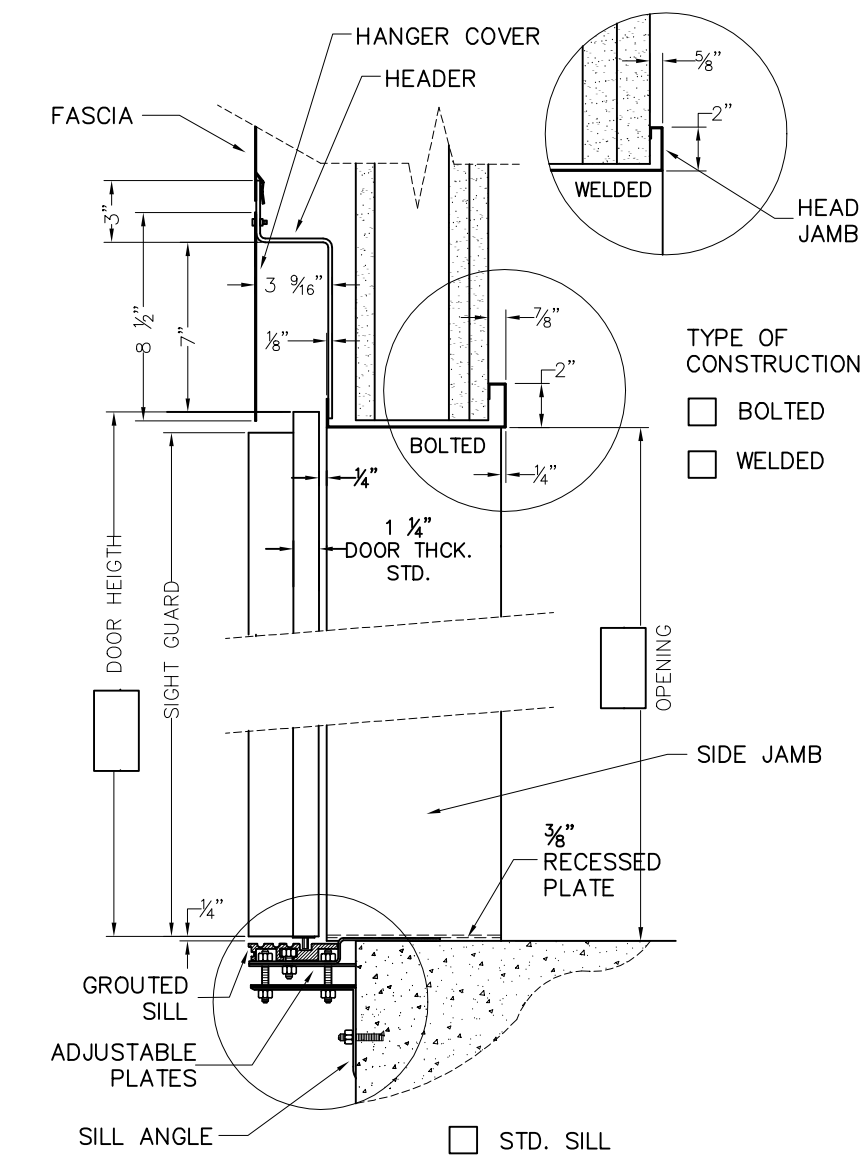

TYPE OF CONSTRUCTION

☐ BOLTED

☐ WELDED

☐ STD. SILL

☐ GROUTLESS SILL

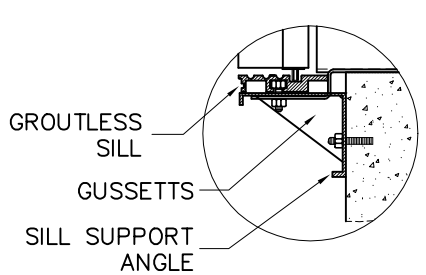

SECTION

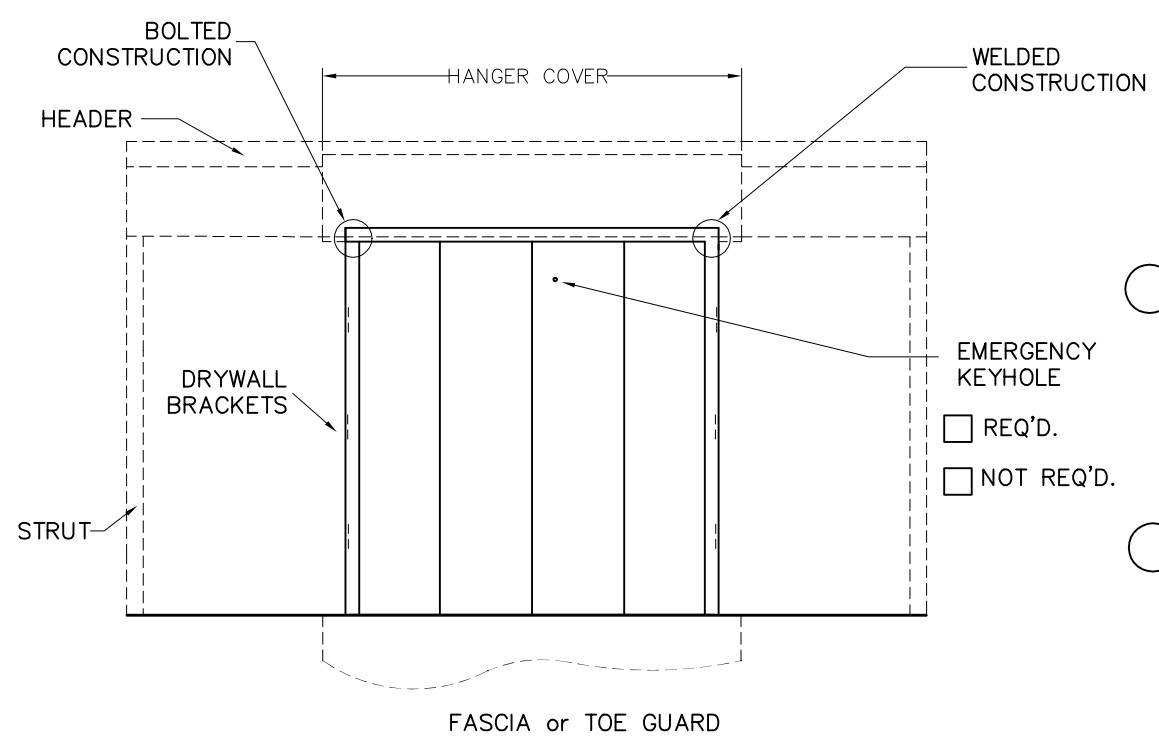

☐ REQ'D.

☐ NOT REQ'D.

ELEVATION

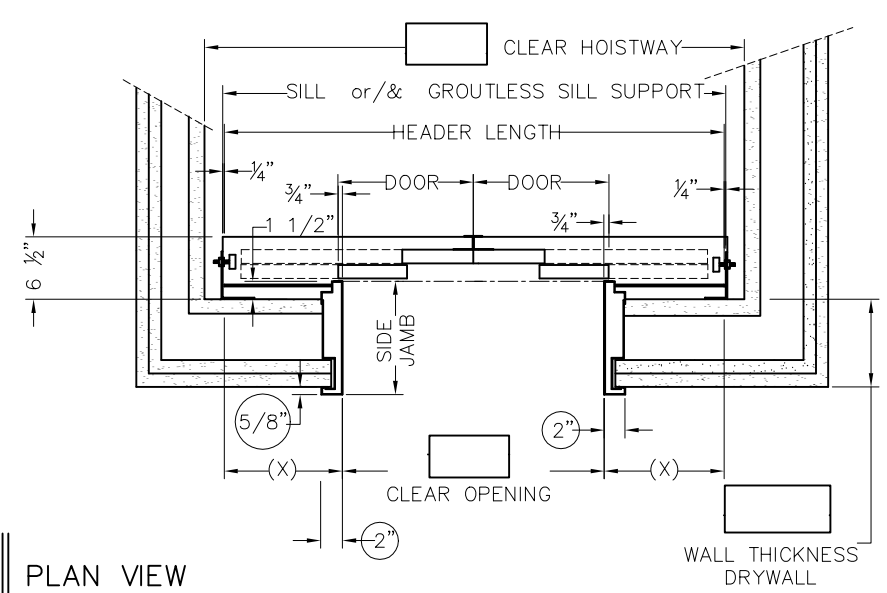

PLAN VIEW

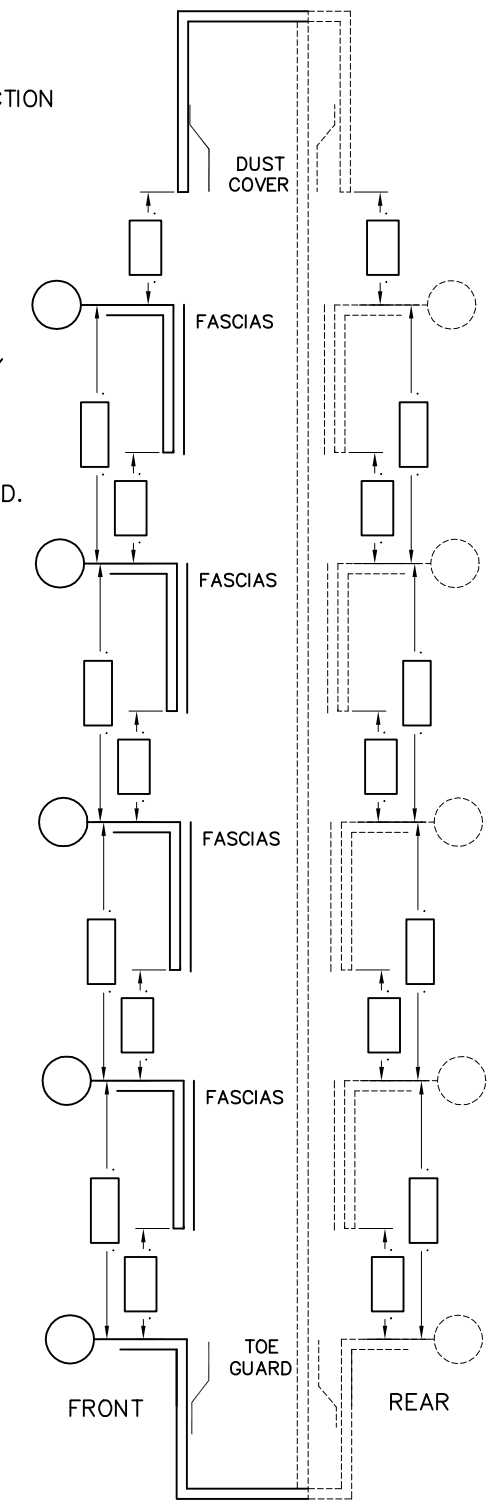

☐ FRONT ☐ 1 SHAFT

☐ REAR ☐ 2 SHAFTS

☐ SIDE ☐ 3 SHAFTS

☐ OTHER

NOTES:

_____ SETS OF ENTRANCE. C.O 2 SPD AS SHOWN

REVISION AND PRINT RECORD					
REV	PRINTS	SEPIAS	TO	DATE	FOR

OPENING: _____ x _____

SETS Q'TY: _____ TYPE: ☐ L.H ☐ R.H

C.O 2 SPD. DRY WALL ENTRANCE

FRAMES:

MATERIAL CONSTRUCTION: ☐ BOLTED ☐ WELDED

(2") SIDE JAMB (2") HEAD JAMB

☐ "UL" LABEL (1 PER FRAME)

☐ "UL" LABEL (1 PER JAMB / ONLY CA.)

FINISH: _____

HANGER COVER:

HEADER LENGTH:

DOOR PANELS: _____THCK.x_____WIDE x_____HEIGHT

FINISH: _____

☐ "UL" LABEL (1 PER PANEL DOOR)

☐ WITHOUT "UL" LABEL

SIGHT GUARD:

FINISH: _____

SILL: ☐ STD. ☐ GROUTLESS MATERIAL: _____

SAFETY GIBB (1 PER PANEL DOOR)

GIBBS (2 PER PANEL DOOR)

DRILLING DATA: _____

FLOOR NO.					
FIN.FL.–FIN.FL					
STRUT					
STRUT EXT.					

WALL CONSTRUCTION: _____ THCK. _____

DOOR WEIGHT:

BRAILLE PLATE: ☐ REQ'D ☐ NOT REQ'D

FASCIA DETAIL:

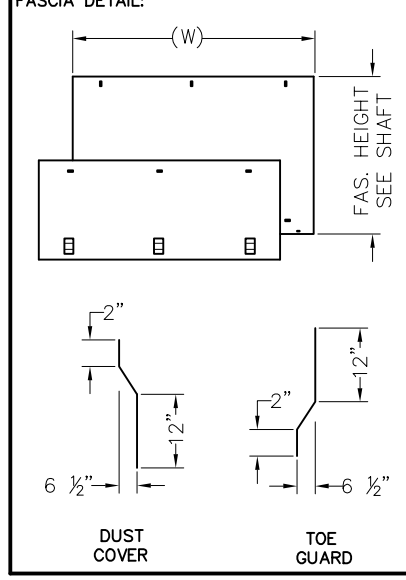

Concept ELEVATOR GROUP

9100A N.W. 58th. STREET , DORAL FL. 33178.
(786)-845-8955 • TOLL FREE 866-506-8955 • Fax (786)845-8531

CUSTOMER:

JOB NAME:

LOCATION:

SCALE: NONE

JOB NO.	P.ORDER NO.	SHEET NO.