SURVEY SHEET. CENTER OPENING 1 SPD
DRYWALL ENTRANCE

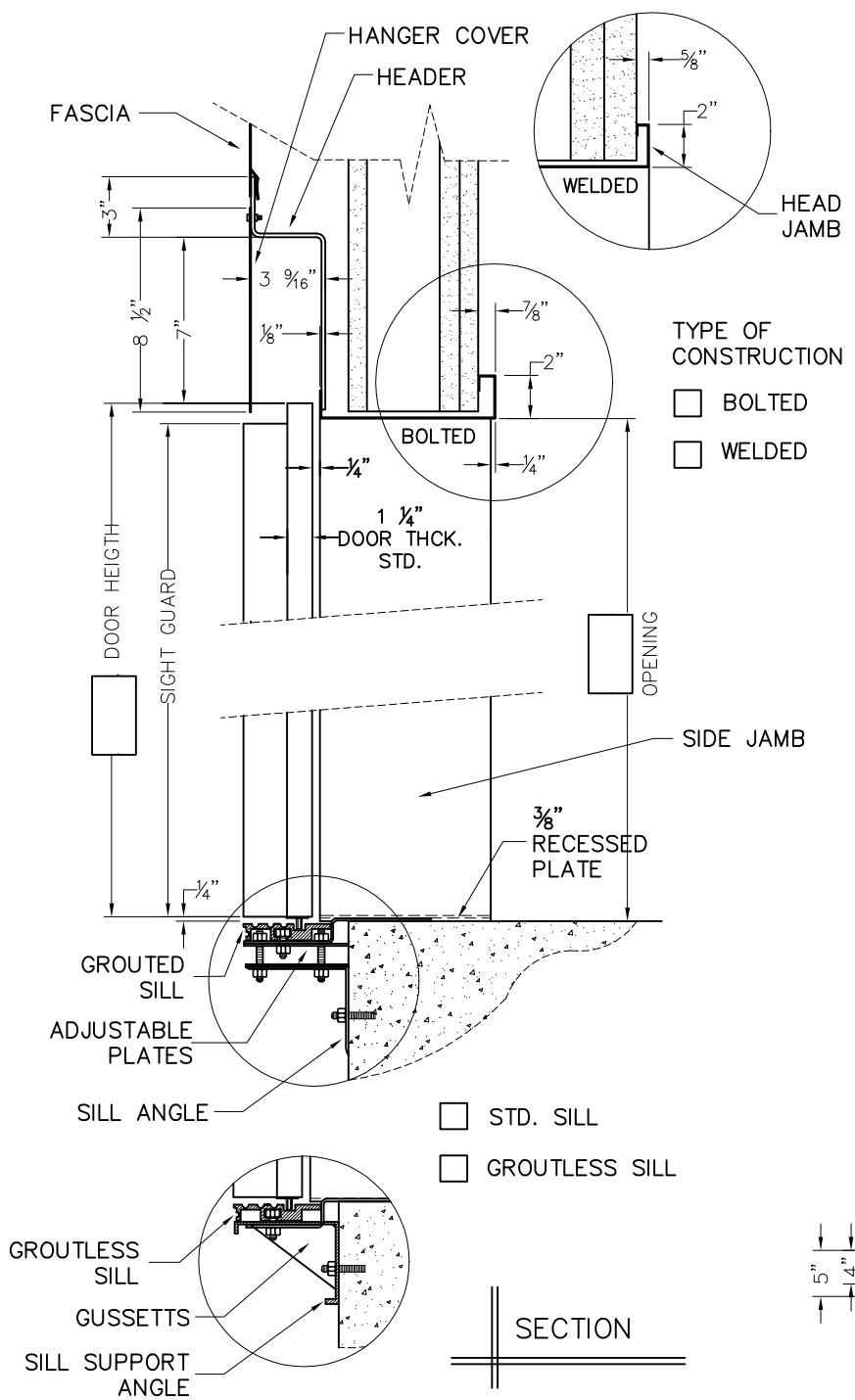

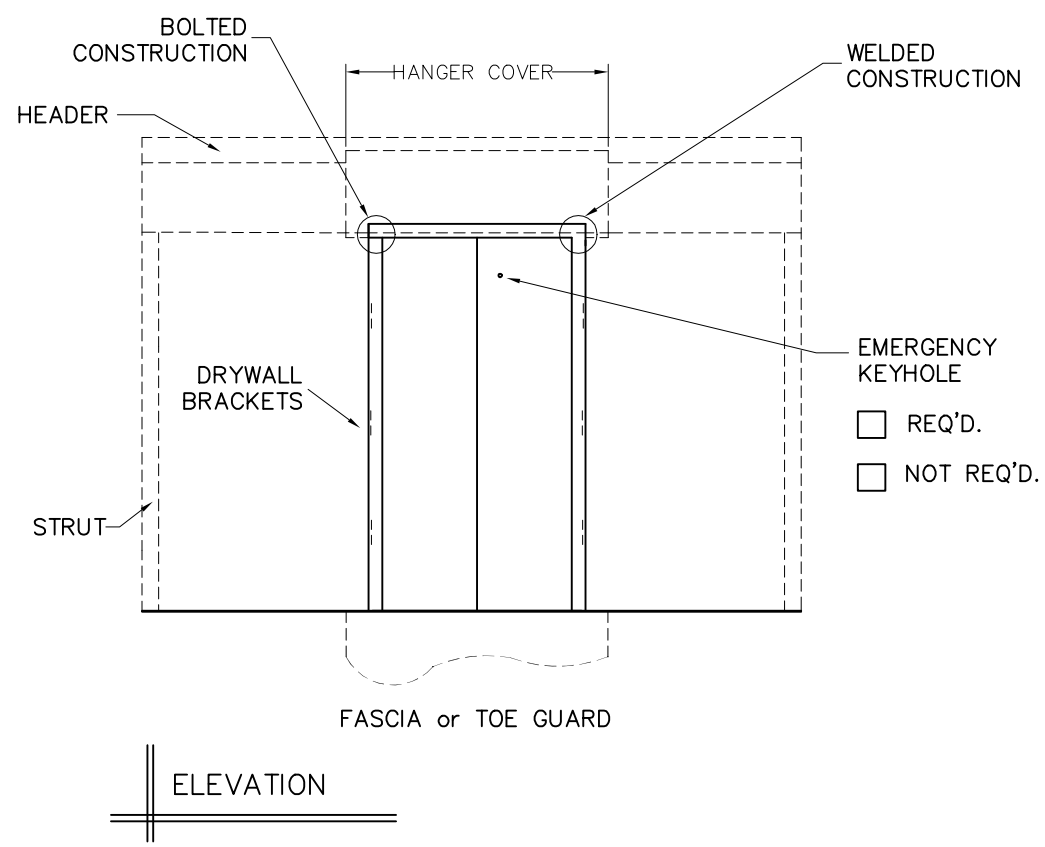

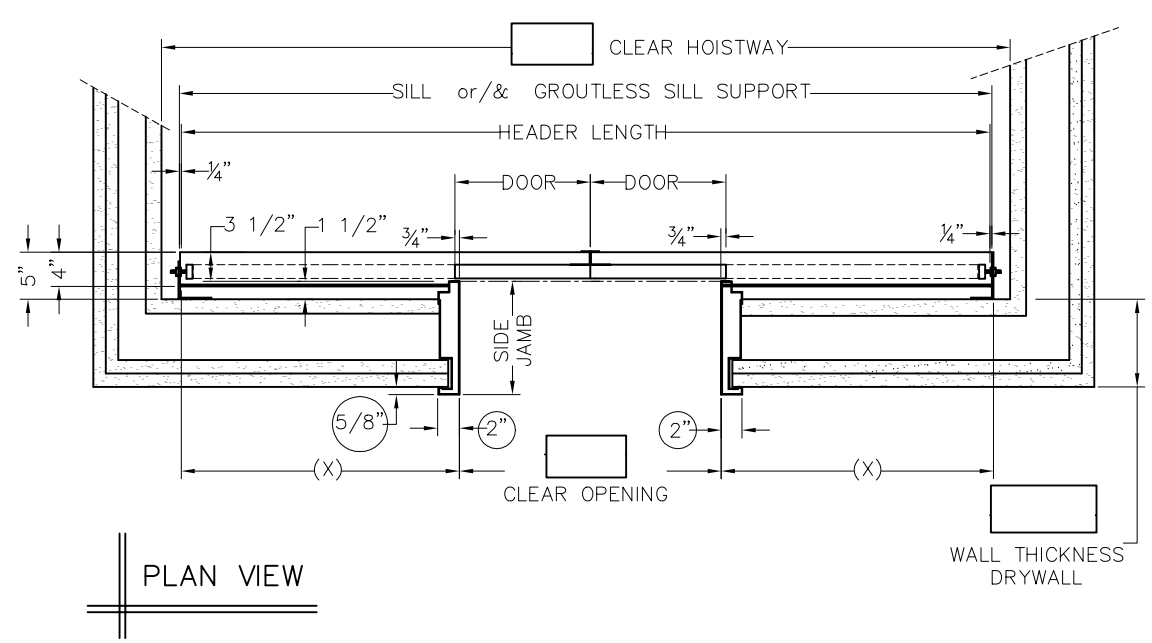

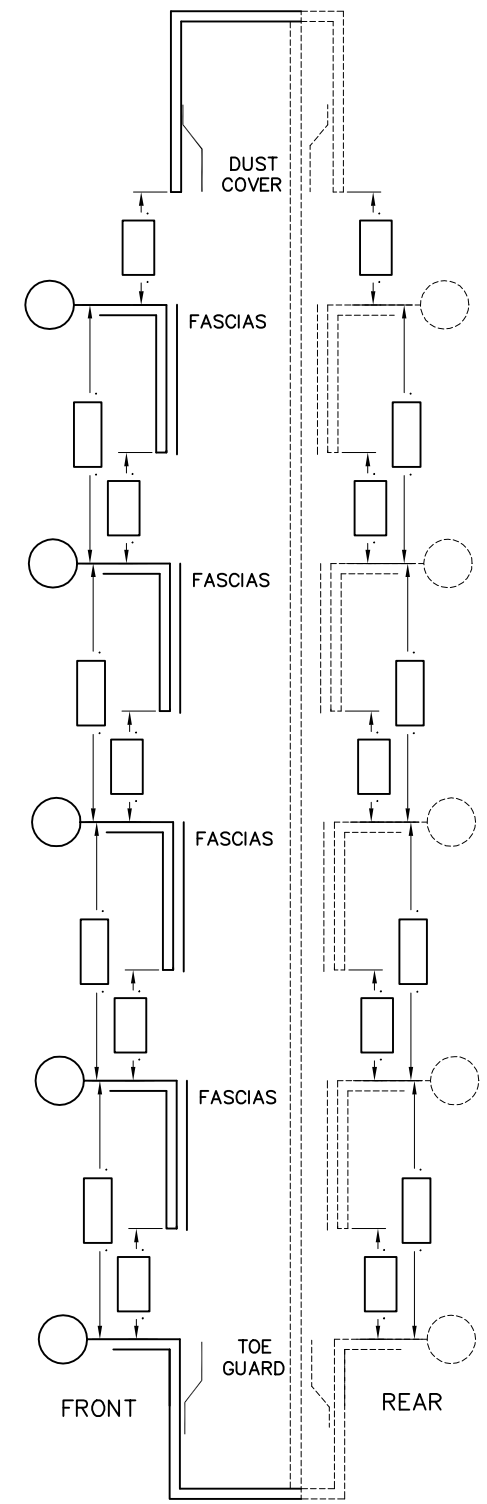

NOTES:

_____ SETS OF ENTRANCE. C.O 1 SPD AS SHOWN

☐ FRONT ☐ 1 SHAFT
☐ REAR ☐ 2 SHAFTS
☐ SIDE ☐ 3 SHAFTS
☐ OTHER

REVISION AND PRINT RECORD					
REV	PRINTS	SEPIAS	TO	DATE	FOR

OPENING: _____ x _____
SETS Q'TY: _____ TYPE: ☐ L.H ☐ R.H

CENTER OPNG. DRY WALL ENTRANCE

FRAMES:
MATERIAL CONSTRUCTION: ☐ BOLTED ☐ WELDED
2" SIDE JAMB 2" HEAD JAMB
☐ "UL" LABEL (1 PER FRAME)
☐ "UL" LABEL (1 PER JAMB / ONLY CA.)
FINISH: _____

HANGER COVER:
HEADER LENGTH:
DOOR PANELS: _____THCK.x_____WIDE x_____HEIGHT
FINISH: _____
☐ "UL" LABEL (1 PER PANEL DOOR)
☐ WITHOUT "UL" LABEL

SIGHT GUARD:
FINISH: _____
SILL: ☐ STD. ☐ GROUTLESS MATERIAL: _____
SAFETY GIBB (1 PER PANEL DOOR)
GIBBS (2 PER PANEL DOOR)
DRILLING DATA: _____

FLOOR NO.					
FIN.FL.–FIN.FL					
STRUT					
STRUT EXT.					

WALL CONSTRUCTION: _____ THCK. _____
DOOR WEIGHT:
BRAILLE PLATE: ☐ REQ'D ☐ NOT REQ'D

FASCIA DETAIL:

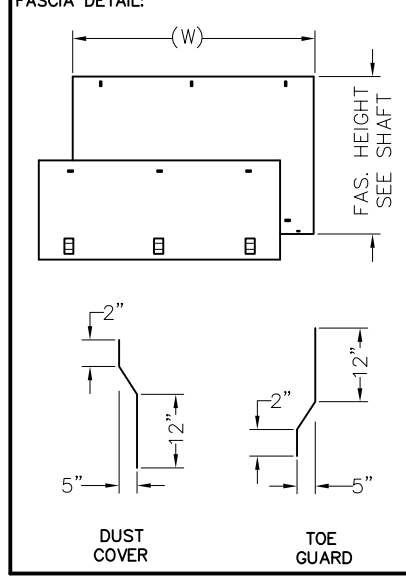

Concept ELEVATOR GROUP
9100A N.W. 58th. STREET , DORAL FL. 33178.
(786)-845-8955 • TOLL FREE 866-506-8955 • Fax (786)845-8531

CUSTOMER:
JOB NAME:
LOCATION:
SCALE: NONE

JOB NO.	P.ORDER NO.	SHEET NO.