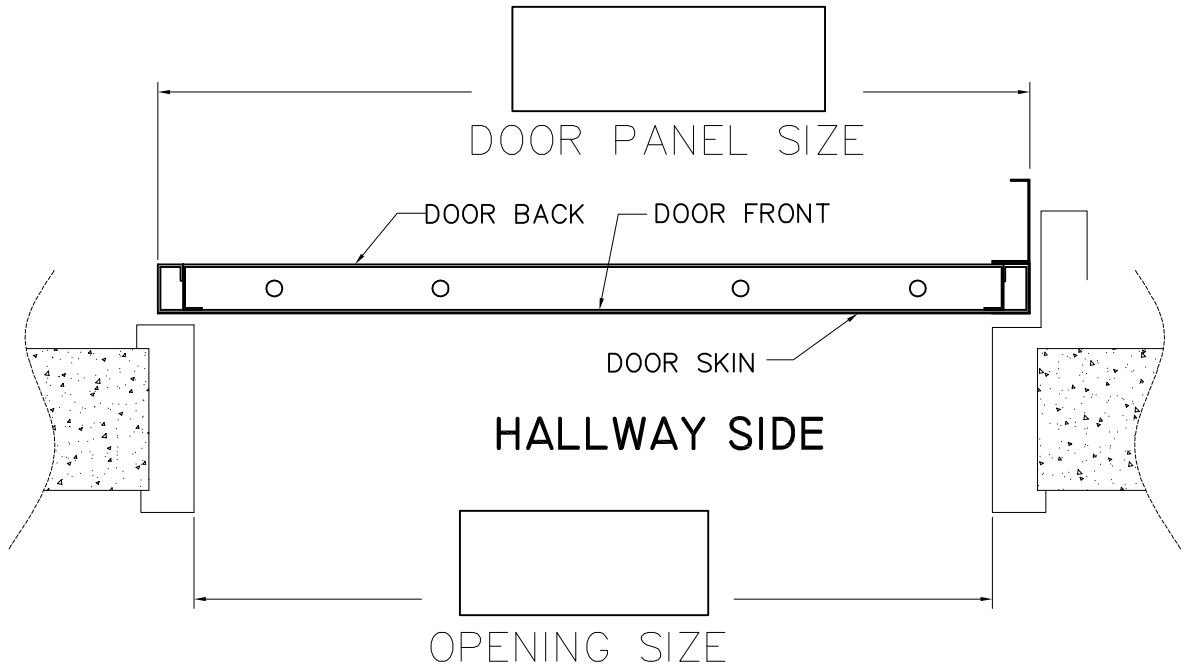

☐ RIGHT HAND AS SHOWN.

☐ LEFT HAND OPPOSITE.

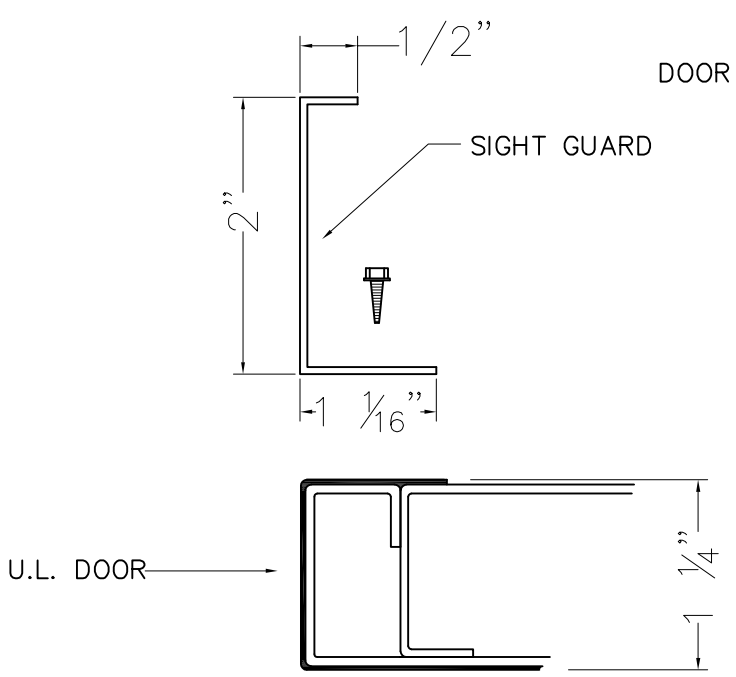

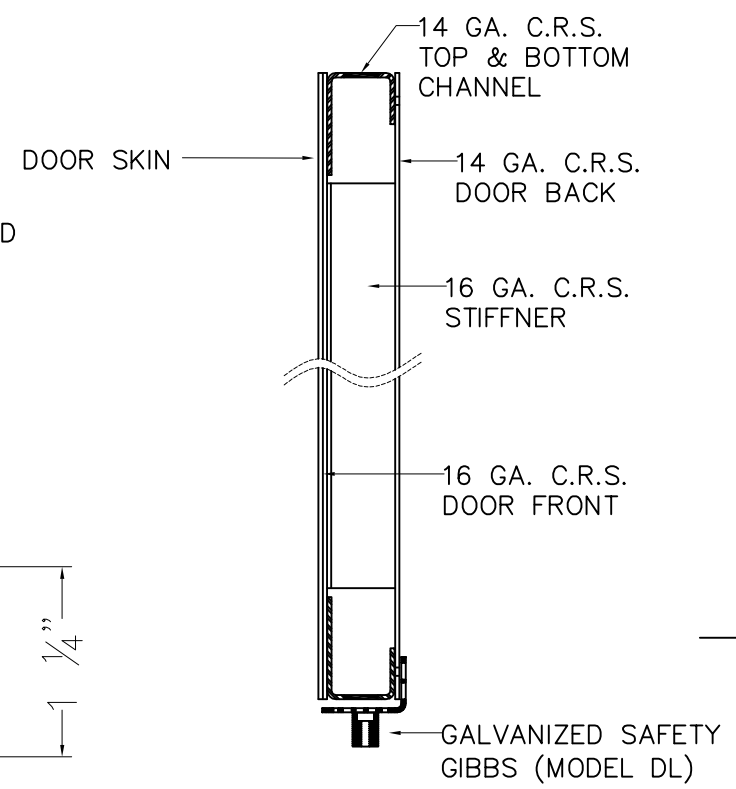

SECTION THROUGH DOOR

☐ REQ'D.

☐ NOT REQ'D.

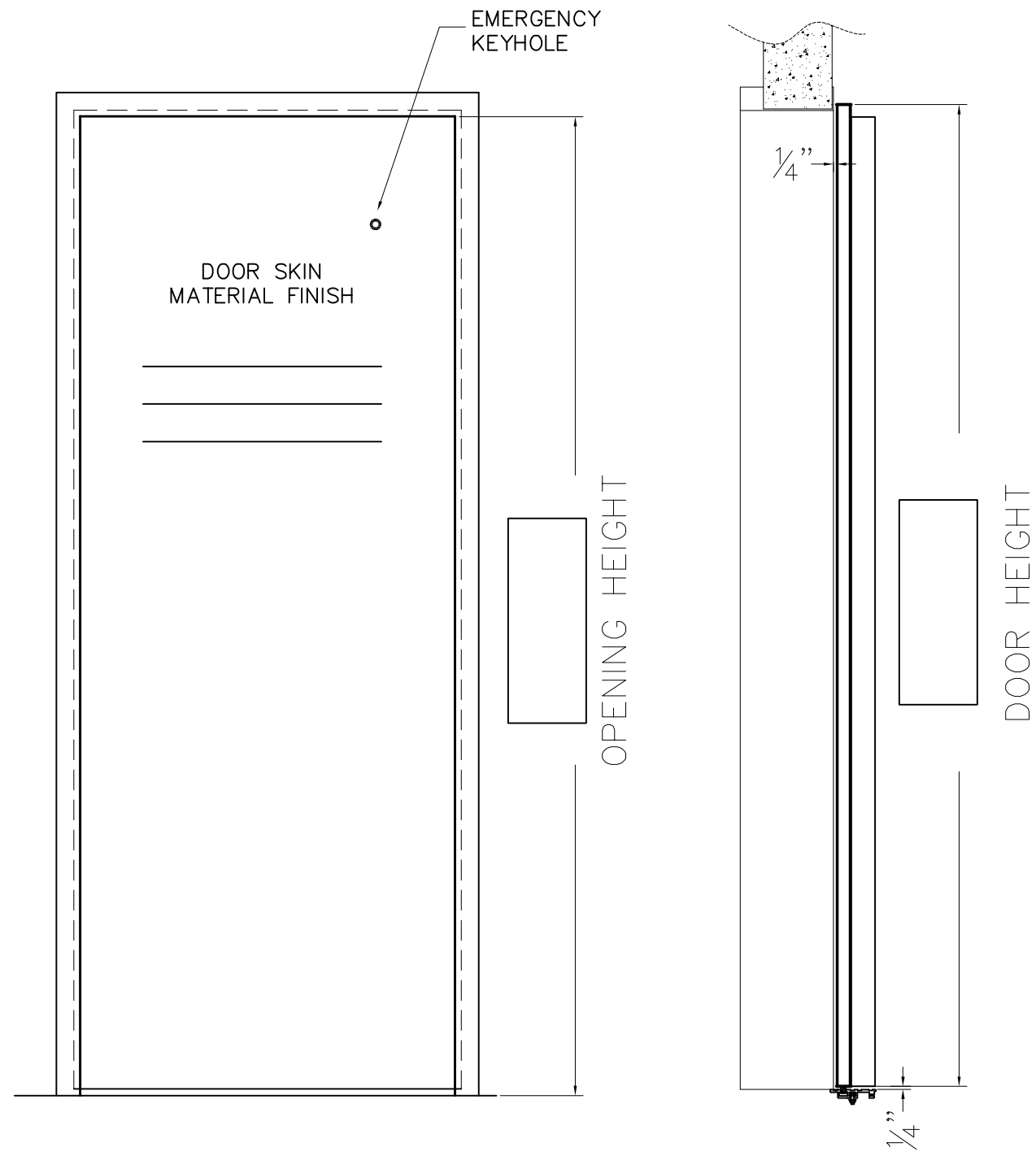

(HALL SIDE)

SINGLE SLIDE HATCH DOORS

DISCLAIMER: THESE DRAWINGS ARE INTELLECTUAL PROPERTY OF CONCEPT ELEVATOR GROUP AND MAY NOT BE REPRODUCED IN ANY WAY WITHOUT WRITTEN AUTHORIZATION. THESE DRAWINGS ARE FOR REFERENCE ONLY AND WILL NOT BE USED FOR CONSTRUCTION

REVISION AND PRINT RECORD					
REV	PRINTS	SEPIAS	TO	DATE	FOR

OPENING:

QTY:

DOOR PANELS: ____x_____x_____

"UL" LABEL (1 per PANEL DOOR)

FINISH: _____

DRILLING:

SIGHT GUARD FINISH: _____

GIBBS REQUIRED: (2 PER DOOR).

HOIST WAY DOORS SAFETY RETAINER: (1 PER DOOR)

ASME A 17.1 a – 2002 CODE COMPLIANT.

TOLERANCES
UNLESS OTHERWISE SPECIFIED

1" (1.00) 25.4 MM OR LESS ±1/32 (.031) .793 MM

OVER 1" (1.00) 25.4 MM LESS THAN 12" (12.00) 304.80 MM ±1/16" (.0625) 1.59 MM

OVER 12" (12.00) 304.80 MM LESS THAN 60" (60.00) 1524 MM ±1/8" (.125) 3.18 MM

OVER 60" (60.00) 1524 MM TO 120" (120.00) 3048 MM ±1/4" (.250) 6.35 MM

CONCEPT ELEVATOR.
GROUP. LLC.

9100A N.W. 58th. STREET , DORAL FL. 33178.
(786)-845-8955 • TOLL FREE 866-506-8955 • Fax (786)845-8531

CUSTOMER:

JOB NAME:

LOCATION:

ARCHITECT: SCALE: NONE

DRAWN BY:

JOB NO.	P.ORDER NO.	SHEET NO.